FITRE S.p.A. • Divisione DSI
20142 Milano • Italia • via Valsolda, 15
telefono: (+39) 02.8959.01 • telefax: (+39) 02.8959.0400
e-mail: divisione.dsi@fitre.it

IMS

magnetic switches

DS IMS-EN - Rev.1803

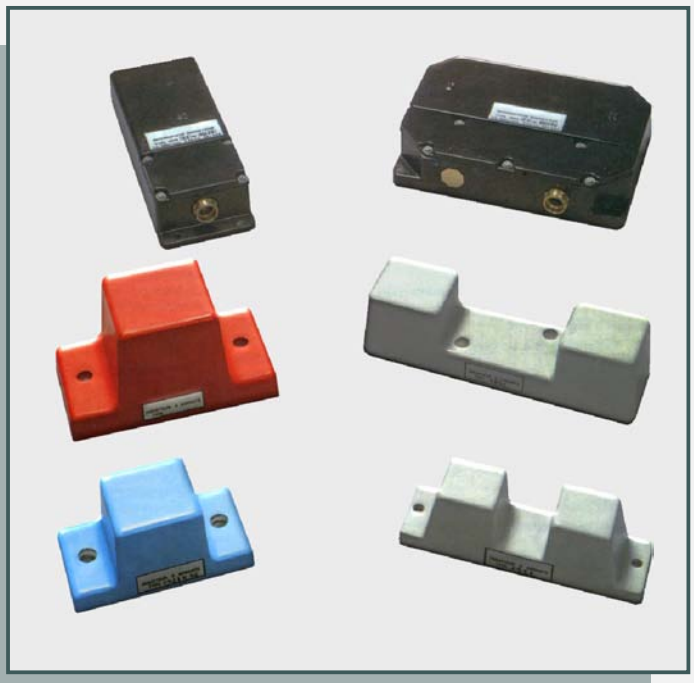

Magnetic switches

Magnetic switches may be used for a variety of purposes including the control and detection of moving bodies; they may be used as limit switches or presence detectors.

Magnetic Switches have proved themselves internationally by years of use in large steel companies and the process industries as ideal to overcome limitations of other magnetic and mechanical switches.

By virtue of the very robust switch enclosures, they may be positioned in a variety of hostile environments and are particularly suitable for use in areas where they may be subjects to damage and corrosion; they may operate satisfactorily in high temperatures and are maintenance free.
Magnetic switches do not require an independent power source and can be utilised for controlling Intrinsically Safe circuits.
The switch mechanism consists of two changeover contacts on a movable plate which are operated simultaneously and controlled by permanent magnets contained within the switch.
The position of the movable plate can be altered by the influence of a magnet of the correct polarity moving in the proximity of the switch.

Two types of switches are availables, each with a different operating action dependent on the control function required.
The automatic re-set switch is operated by the approach of the inductor and is only maintained as long as the inductor is within the operating zone. On leaving the proximity of the switch the contacts will return to their original position.

In the second type of switch the contacts are operated by the movement of the inductor whilst in the proximity of the switch, and remain in that position until such time as they are operated by the passage of the inductor in the opposite direction.
Effectively the switch is memorising the movement produced by the inductor.
Two general purpose models of each type are available designed for different operating distances; the maximum operating distances are 60mm and 180mm respectively.
For corrosive environments a sealed stainless steel case version of the 180mm model is available.

Advantages

- Safe operation under the most arduous conditions.
- No mechanical parts subject to wear.
- Totally enclosed.
- No maintenance required.
- Unaffected by external mechanical influences.
- Flexibility due to wide operating distances.
- No external power source - ideal for I.S. circuits.

Industrial users

Large Process Plants (steel, chemicals)
Bulk Handling Plants (ore, quarries, lime)
Docks and Railways (cranes, trucks etc.)
Mining Industry (surface and underground)

Basic applications for magnetic switches

- Overwinding gear
- Control of skips and hoisting cages.
- Checking the presence of cages at Deck levels and shaft bottoms.
- Positioning of conveyor belts relative to hoppers.
- Checking the load on conveyors
- Door closing control mechanisms.
- Positioning of travelling cranes and travel stops.
- Transmission of data to travelling cranes (electromagnets).
- Gantry crane travel limits.
- Positioning and checking the presence of mine cars.
- Travel limits of mine cars.
- Control of ingot cars and positioning of ingot rollers.
- Positioning of lime cars in basic steelworks
- Control of cars for blast furnace loading
- Checking of loaders
- Travel limits of moving spouts.
- Control of level in tanks.
- Signalling of billet cars.
- Gas holder level detection
- Various servo-control mechanisms.

Properties
Two Magnetic switches types are available

1) AUTOMATIC RESET mechanical analogue type with roller switch. (Symbol RA)
The operation of the switch contacts brought about by the approach of the inductor is only maintained during its presence. On withdrawal of the inductor the contacts return to their former position. This is used to indicate either the presence or the passage of a specific object.

2) TWO POSITION mechanical analogue type with tumbler switch. (Symbol PS)
The operation of the switch contacts brought about by the approach of the inductor is maintained after the inductor has left the operating area.The return of the inductor in the opposite direction causes the contacts to return to their former position.This is used to indicate the position of a specific object.
Two models of each type are available, designed for different operating distances. The maximum operating distances are 60 and 180 mm respectively.

Mechanism
The simple and sturdy mechanism consists of a moving balanced armature operating two sets of changeover contacts and maintained in position by the attraction of two permanent magnets. The switches, polarised by this arrangement are only operated by the influence of an external magnetic field of given direction.

Contacts
The two sets of changeover contacts are in silver/gold 900/1000 alloy, electrically isolated but mechanically coupled.
CONTACT RATING - 2.5 A at 240 Vac - 2.0 A at 110 Vac
Connecting the contacts in parallel enables a current of 4 Aac to be interrupted.
A single set of contacts may not be used on DC Voltages above 100 V, the maximum current being 0.2 A.

To switch DC voltages above 100 V, the two pairs of contacts must be connected in series. The following ratings then apply
0.2 A at 240 Vdc
0.5 A at 110 Vdc

Enclosures
The switch assembly is available in a light alloy enclosure covered with a plastic material that gives protection against most chemicals. It is divided into two compartments, one containing the switch mechanism, the other the six terminals for connecting the cables to the appropriate contact sets. Cable entry is made through an 11, 13 or 16 mm packing gland.
There is, too, models where the switch assembly in an epoxy resin filled, fully sealed stainless steel case supplied for particularly corrosive environments or for use underwater or where the equipment has to be waterproof. The connecting cable is an integral part of the switch, the cable being firmly secured by means of a cable gland and clamping device.

Inductors
A. Permanent Magnet Inductors.
These are constructed using permanent magnets made in TICONAL and coated with a low density plastic that is impervious to most chemicals in current use. The magnets have a high stability and are not sensitive to vibrations.
The letters N and S on the housing identify the polarity of the inductors.

B. Electro-Magnetic Inductors
Electro-Magnetic Inductors in sealed enclosures operate the magnetic switches in the same way as permanent magnet inductors but in addition allow cancellation or reversal of polarities.

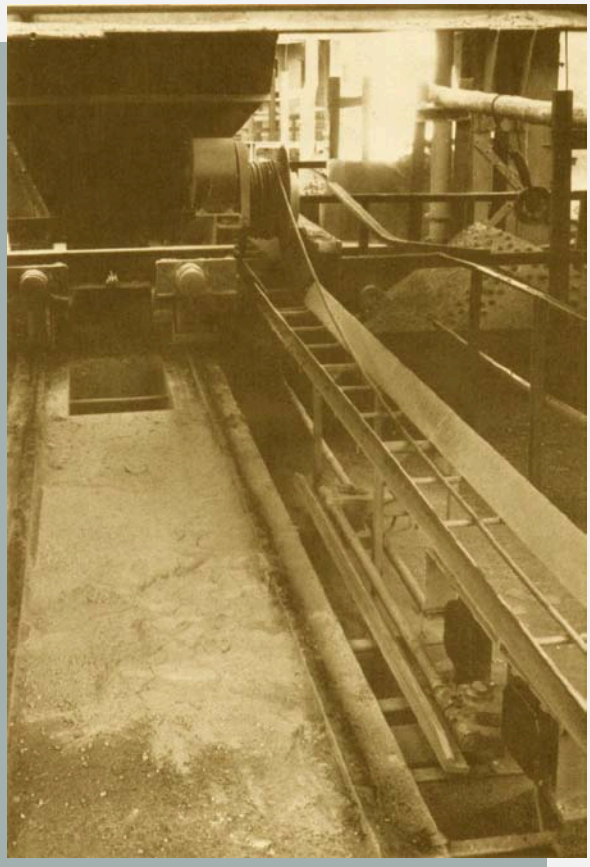

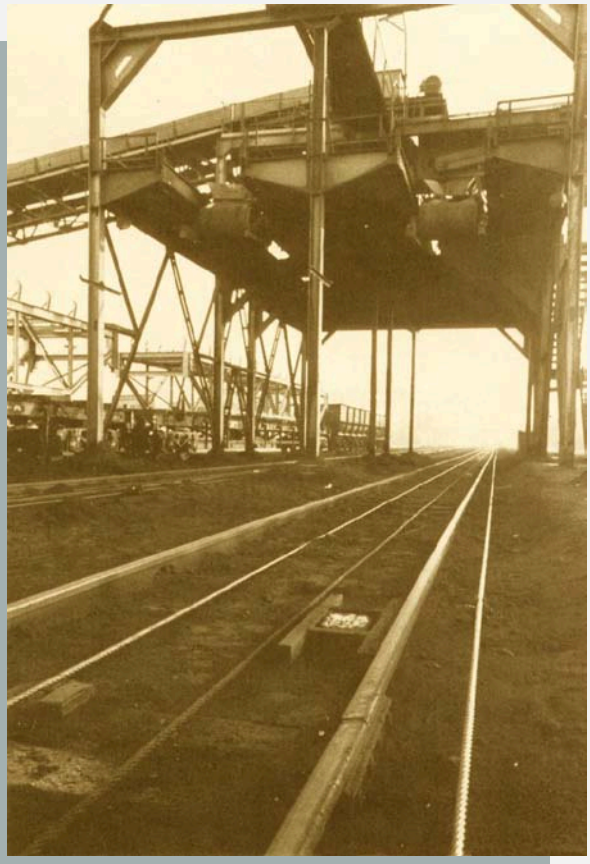

KEY TO OPERATING DIAGRAMS

Definition of terms and letters used in the diagrams:

OPERATING AREA:.....area within which the inductor operates the switch. For the AUTOMATIC RESET switch, the contacts are maintained in the OFF position by the inductor within the area defined: in this case by the sum of distances D' + D.

P1 and P2:.....position of the inductor where the switch operates
P1 = Tripping ; P2 = Resetting.

D': .....Distance from the tripping point of contacts P1 and the switch centerline.

D:.....Distance from contact reset point P2 and the switch centerline.

H:.....Distance from switch to inductor.

Hmax: .....The theoretical value of H above which the switch ceases to operate. (In practice this figure should be reduced by 15%.

Hmin: .....Value of H below which the operation of the switch is reversed. The inductor must not travel at a distance less than H from the switch.

RQ: .....Travel centerline of inductor.

S or N: .....Polarities.

F and F': .....Directions of travel of inductors.

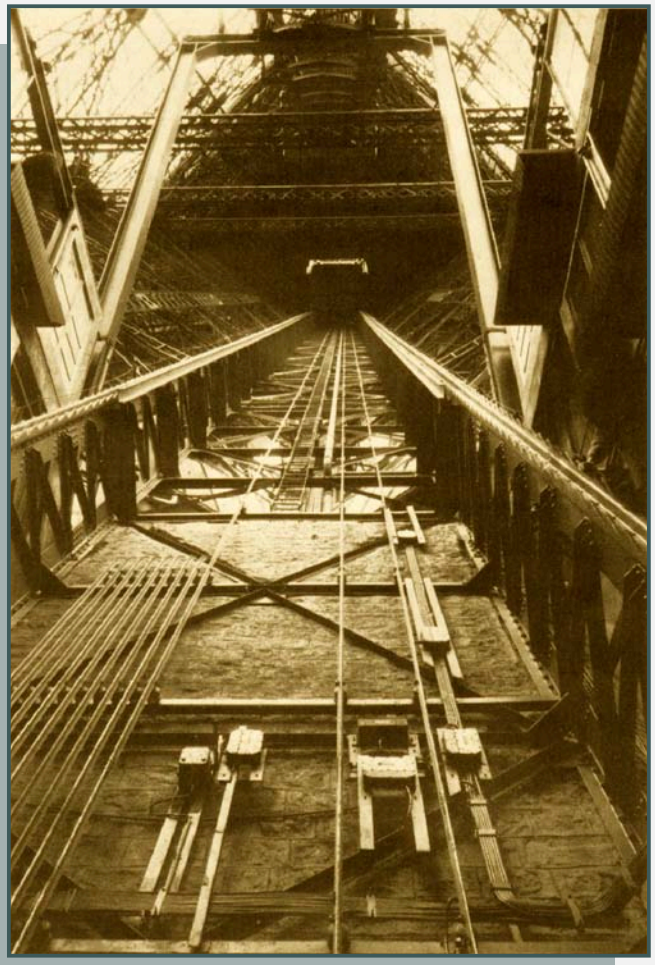

Tour Eiffel

1) Operating by **"approach"** (automatic Reset type only)

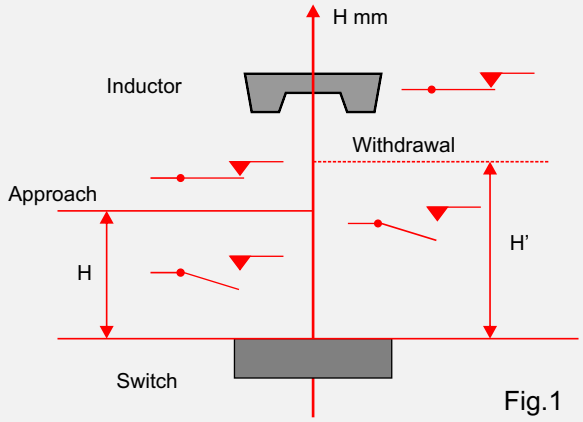

Fig.1

The inductor travels along an axis at right angles to the mounting surface of the switch; the distance for contact operation for both switch models with their respective inductors are given in the table:

Type of equipment		Operating distances (mm)	
Switch	Inductor	H	H'
1919 RA 1892 RA	1922 o 1969 1895 o 1975	60 190	125 320

2) Operation of the switch by the **"passage"** of the inductor
The inductor travels along an axis parallel to the mounting surface of the switch.

Relative position between switches and inductors

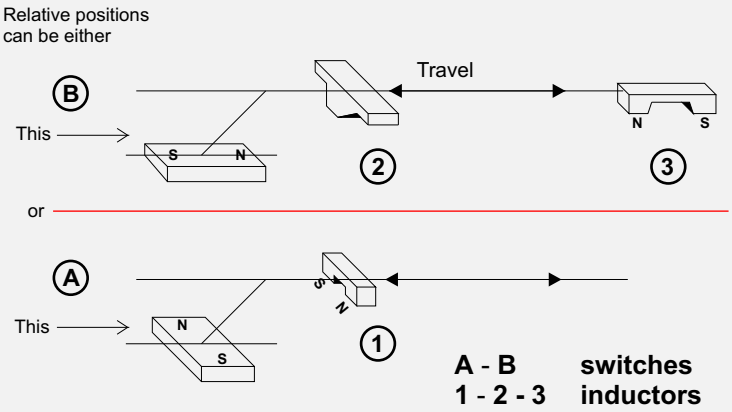

Fig.2

1. operating diagrams of the automatic reset switch
The diagrams show the points at which the switch contacts are actuated by an inductor travelling in the direction of the arrow F'. Where an inductor is travelling in the opposite direction F the operating curves will be reversed.

(a) Arrangement (A)(1) (see Fig.2) - the inductor travels along an axis right angles to its centerline and to the switch centerline.

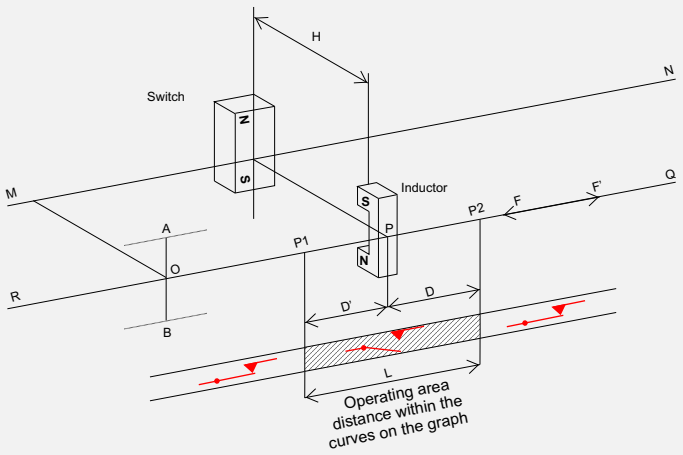

OA o OB max = 35 mm maximum

Operating curve

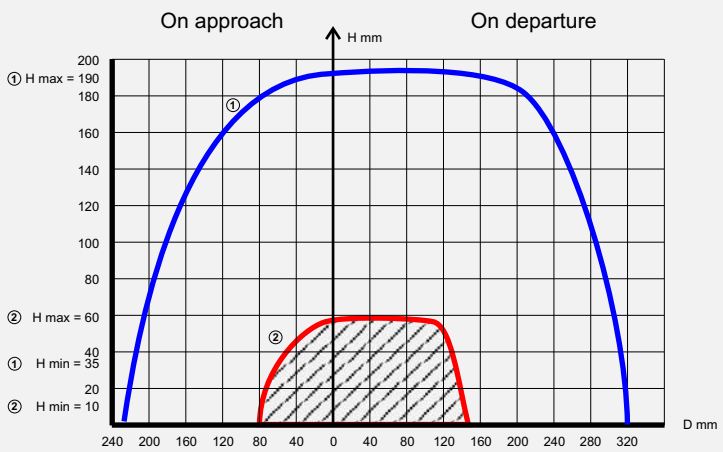

1 Switch 1892 RA and inductor 1895 or 1975
2 Switch 1919 RA and inductor 1922 or 1969

Fig.3

Note : If a wider operating area is require it is possible to use two inductors provided their operating distances are compatible.

(b) Arrangement (B)(3) (see Fig.2) - the inductor travels along an axis right parallel to the switch centerline. This arrangement allows a reduction in the operating area compared with example (a) above.

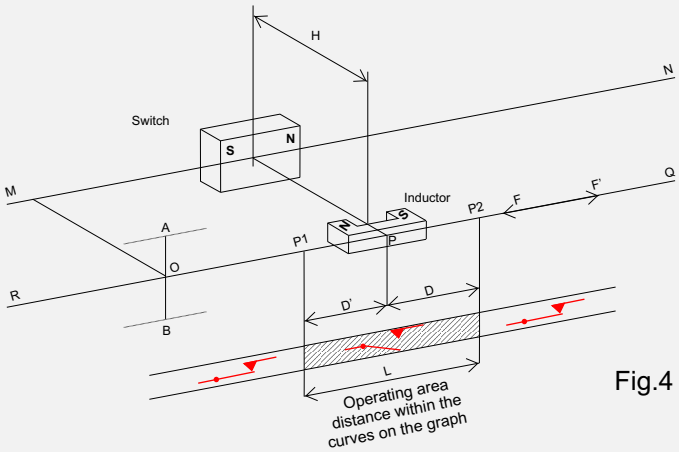

Fig.4

Operating curve

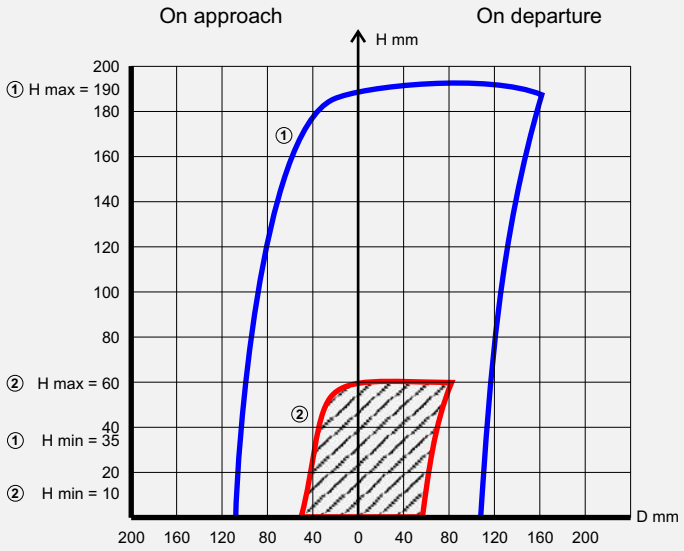

1 Switch 1892 RA and inductor 1895 or 1975
2 Switch 1919 RA and inductor 1922 or 1969

Fig.5

2. operating diagrams of the two position switch

The operation of the Two Position Switch is effected in two different arrangements by the use of two types of inductors.

a) Arrangement (B)(2) (see fig.2) - using a single inductor 1927 A 50 or 1927 A 36.The inductor travels along an axis parallel to the switch centerline.
The operation of the switch contacts brought about by the approach of the inductor is maintained after the inductor has passed out of the operating area. The return of the inductor in the opposite direction causes the contacts to return to their former position. The distance between points P1 and P2 is determined by the model of switch used.

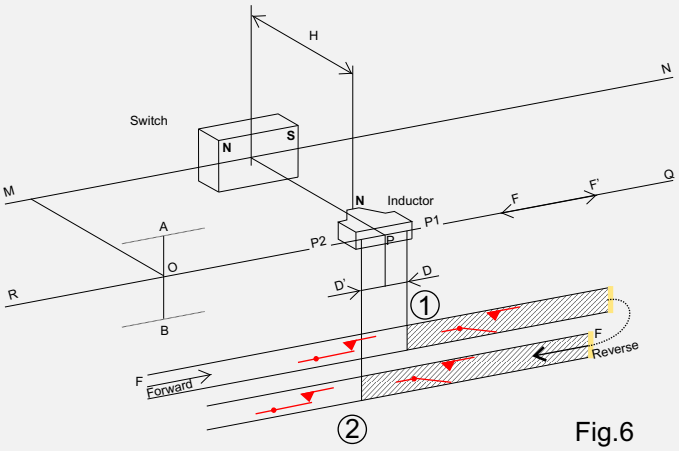

Fig.6

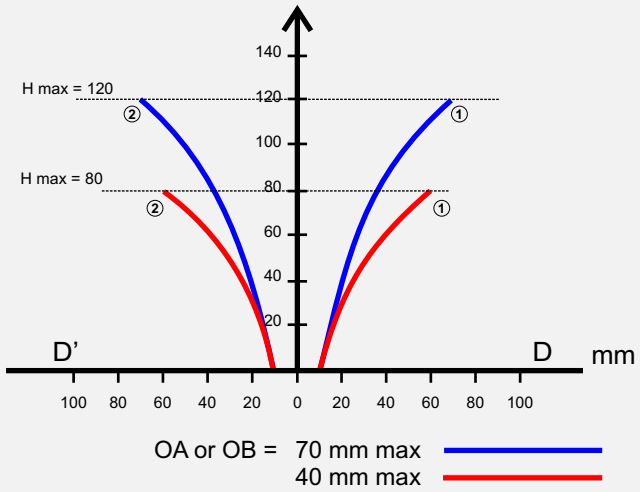

Switch 1892 PS with:
inductor 1927 A36
inductor 1927 A50

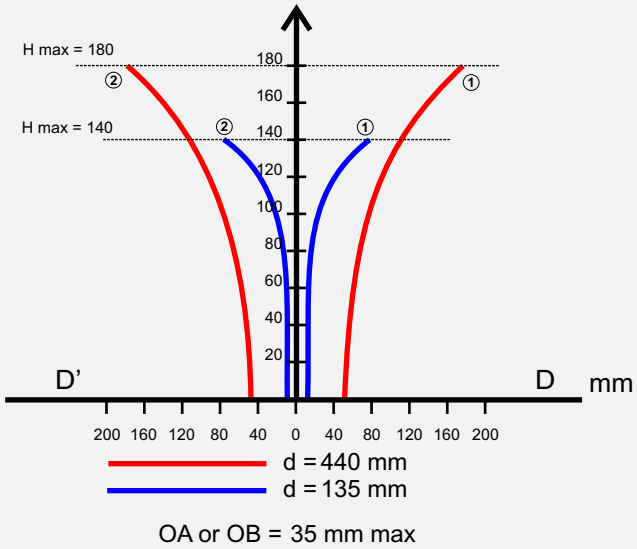

Switch 1892 and inductor 1895 o 1975

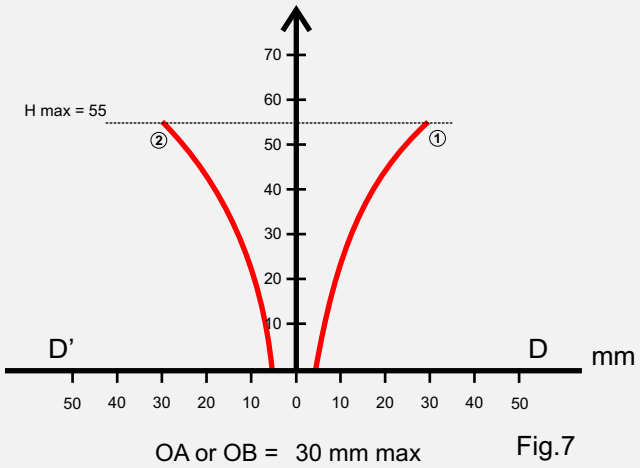

Fig.7

Switch 1919 PS with:
inductor 1927 A36

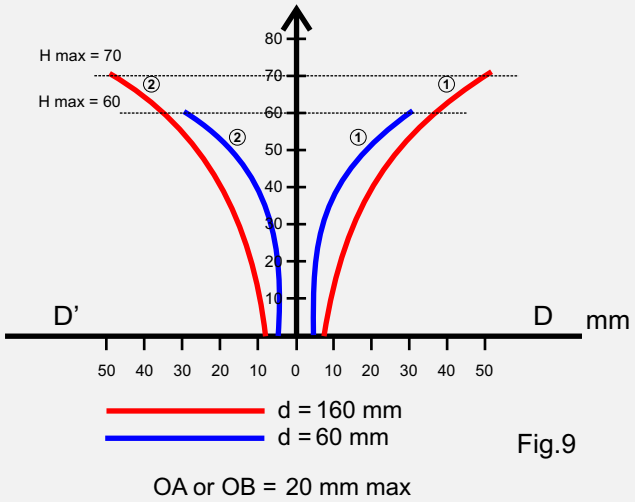

Fig.9

Switch 1919 and inductor 1922 or 1969

Note : the active pole of the inductor marked N (North) in Fig.5 can be supplied with S (South) polarity for certain applications.

b) Arrangement (A)(1) (see Fig.2) - where an operating distance greater than that offered by arrangement (B)(2) is required, two inductors as shown in the following diagram may be used.

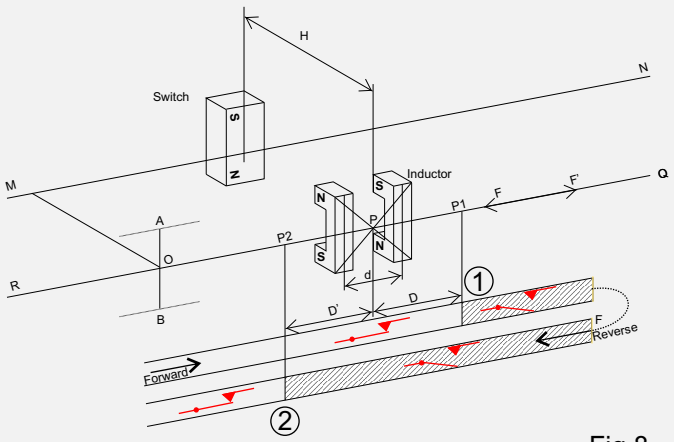

Fig.8

This arrangement should be used when:

- the practical value of H is required to be more than 110 mm and up to 160 mm
- the distance from P1 to P2 is required to be up to several meters. (by increasingthe value of 'd').
- there are Two Position and Automatic Reset Switces on the same line. Only one of the inductors trips the Automatic Reset Switch due to their polarity.

Note : When the Inductors are very close (dotted line) the maximum operating distance 'H' is reduced. Its normal value applies when the value of 'd' is more than either 440 mm or 160 mm depending on the type of switch used.

Factors affecting the mazimum operating distances

The operating diagrams given in the previus pages have been established under the following conditions:

- the speed of the inductor is near to zero.
- there are No magnetic fields near the equipment.
- the inductor travelsexactli along the centrelin of the switch and parallel to it.

In practice the maximum operating distance has been found to be 15% less than the theoretical distance shown in the operating diagrams.

A - Speed of travel.

The travelling speed of the inductor can influence the effective operating distance. The maximum theoretical operating distance 'H' given in Figs.1,3,4,6,and 8 must be reduced in accordance with the following table:

Speed of Inductor	Reducing Coefficient of H. Max.
0 ÷ 6 m/sec	1
7 ÷ 14 m/sec	0,9
15 ÷ 25 m/sec	0,8

In some cases, due to the response time of the relays or contactors controlled by the magnetic switches, the inductors may have to be doubled in order to increase their influence time.

B - Influence of surrounding magnetic fields

I Inductors
The inductors may be fixed directly to flat magnetic surfaces quite safely. However, magnetic fields should be avoided within 80 mm of the side walls of inductors type 1895 and 1927A50 and 50 mm of inductor type 1922 and 1927A36.

II Switches
No magnetic part must be within 40 mm of switches type 1919PS and 1919RA, 60 mm of switches type 1892PS and 1892RA
However, in the case of mounting on a magnetic surface the maximum operating distances should be reduced by 5%.

C - Alignment
The offset limits along the centre line of the inductor and the switch parallel to it are shown in the operating diagrams as 'OA' and 'OB'.

APPLICATIONS

The followin diagrams give several examples of the possibilities offered by Magnetic Switches

Control of a Mobile within a Defined Area
1. Tractor Drawn Shuttle Car
Two Magnetic Switches of the Two Position type are mounted at the extremities of the zone. The Shuttle car is fitted with an Inductor No.1927A36 or 1927A50 or a pair of Inductors N's 1922 or 1895 arranged as shown in exemple 2.

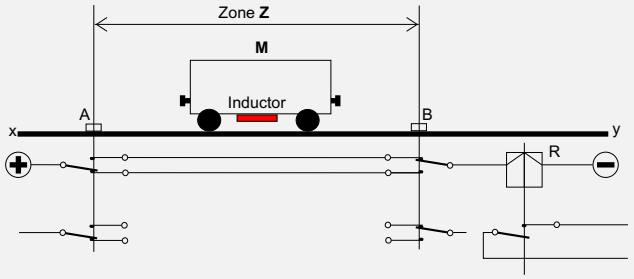

Fig.10

During the period when the shuttle car is within the operating zone, the relay is de-energised giving indication or other control function.
When the shuttle car passes the switches on leavig thezone, the relay energises and indicates the passage of the car.

2. Self propelled shuttle car.
The Suttle Car is fitted with a Two Position Magneti Switch. Two inductors either 1927A36 or 1927A50 ase situated at the extremities of the zone, with active polarities reversed. The two position switch mounted in this way fulfils a control function to the Shuttle Car.
N.B.
The Inductors A and B, No's 1927A36 or 1927A50 can each be replaced by a pair of Inductors No's 1922 or 1895 arranged as shown below

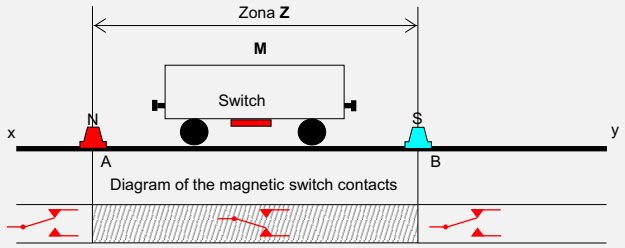

Fig.11

3. Control of a self-propelled Shuttle Car within several zones.
The equipment used is the same as that used in exemples 1 and 2.

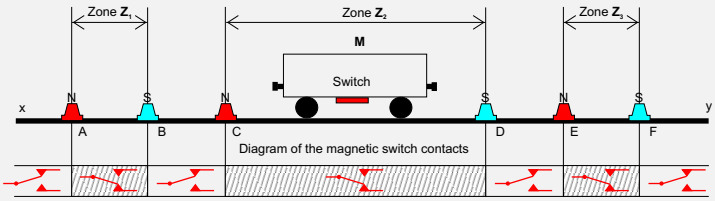

Fig.12

4. Control of a Shuttle Car in relation to several zones.
The Mobile is fitted with an Inductor No.1927A36 or 1927A50 or two No.1922 or 1895; two switches of the two Position type limit the controle area.

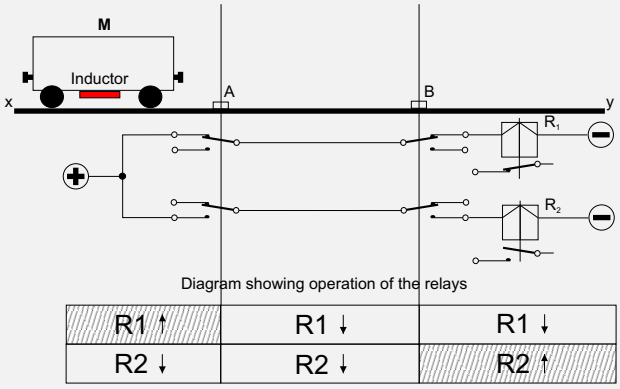

Fig.13

5. Control of a mobile within a specific area 'Z'.
The below diagram represents the possible movements of a rail car within a marshalling area.
Indication and control of an operation within a defined zone can be monitored by the used of a series of Automatic Reset Switches and Inductors as illustrated in the Schematic Diagram below.

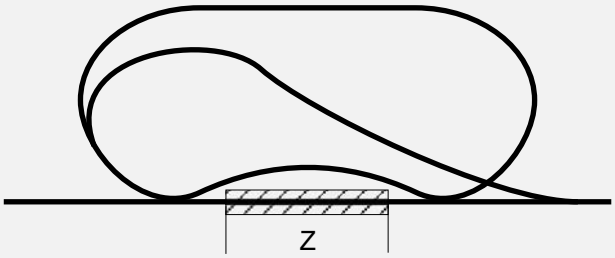

Fig.14

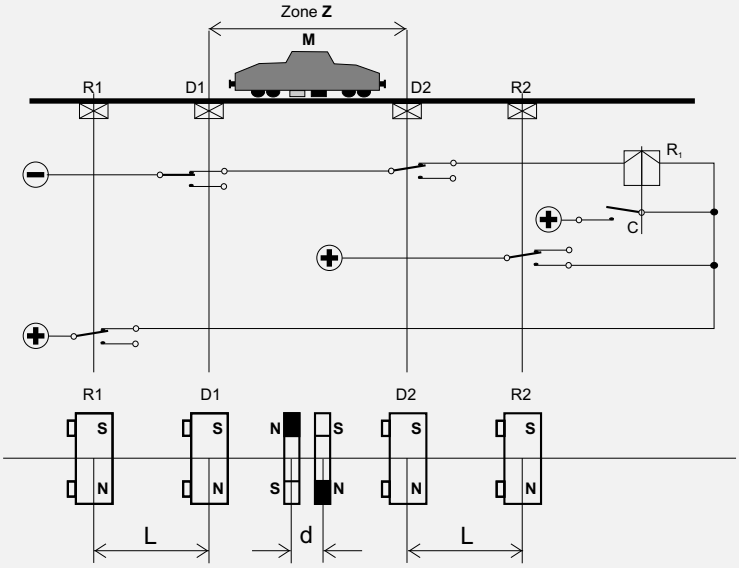

Fig.15

The Magnetic Switches R1, D1, D2, R2 are of the Automatic Reset type. On the rail car, two Inductors no.1922 or 1895 are arranged side by side with opposing polarities. At any given position of the rail car only one of the inductors is actively operating the switch due to the relative polarities of the switch and inductors The relay 'r' is de-energised when the rail car is within the operating zone.

- Switches R1 and R2 - reset relay 'r'
- Switches D1 and D2 - trip relay 'r'

N.B. - It is necessary that distance L = 4d.

6. Automatic Stopping of a Mobile at Various preselected points.

Permanent Magnetic Inductors may be used in conjunction with electromagnetic inductors and a two Position Magnetic Switch.

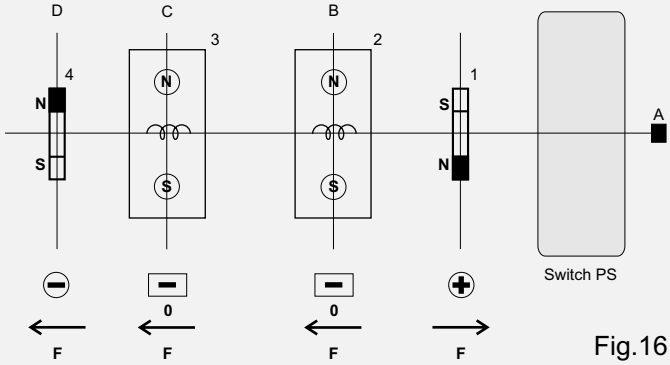

Fig.16

The Mobile always leaves point A and can stop in the direction AD at points BC or D. The return to point A in the direction DA takes place without stopping.
The Two Position Magnetic switch is situated on the Mobile.
Permanent Magnet Inductors are stationed at each end of the travel area with polarities as shown in the Diagram. Electro-Magnetic Inductors are stationed at the intermediate stopping points and may be energised or not dependent upon whether the Mobile is required to stop or not. Arrows indicate the direction of travel of a suitable switch so that it will be operated by a given inductor. The inductors 2, 3, and 4 actuate the Magnetic Switch and stop the mobile when it is travelling in the direction shown by the arrow. Inductor No. 1 resets the Magnetic switch on its return in the opposite Direction.

7. Transmission of orders to a Mobile from a fixed point. (Example showing transmission of two operations.)

The Mobile 'M' is fitted with two Magnetic Switches 1 and 2 of the Automatic Reset type.
At points A and B, the Mobile can stop automatically then carry out an operation.
Two Electro-Magnetic inductors allow transmission of the instructions to the two Magnetic Switches from a distant point without any electrical connection between the switches and inductors.

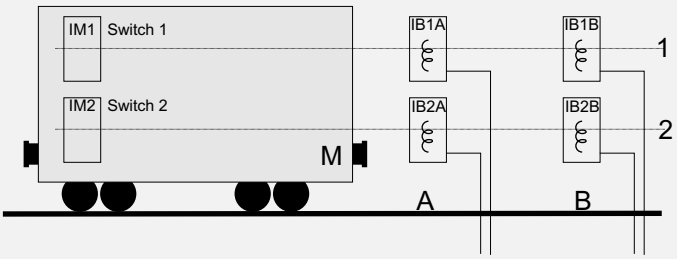

Fig.17

8. Liquid Level Control
To monitor the filling and emptying of a container:
A Two-Position Magnetic Switch is sited at the correct height to allow an inductor No.1922 or 1895 to operate at the high level point. A further inductor with polarity reversed (symbolised by + and -) is situated to allow operation of the switch at the low level point.
During filling of the container the switch contacts closed.
During emptying the contacts are open.
(The arrows show the direction of travel of the float)

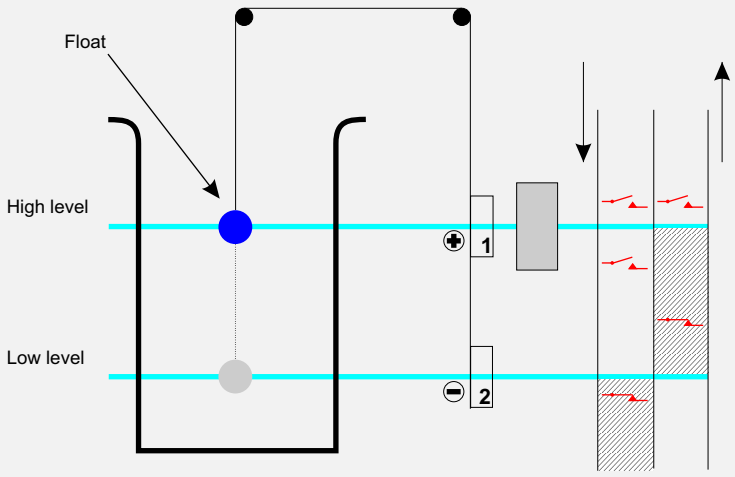

Fig.18

Diagram of the magnetic switch contacts

MAGNETIC SWITCH - TECHNICAL DETAILS

Magnetic switch type 1919

Sealed Case. Max.Operating Distance 60 mm.
Ref. 1919 PS - two position
Ref. 1919 RA - automatic reset

Operating distances vary according to the inductor used:

Inductor	Max. operating distance
1922	60 mm
1927 A 36	60 mm
1969 (coil type)	60 mm

Note:
1. In practice, actual operating distances are 15% less than the figures quoted above.
2. If the speed of the inductor exceed 6 metres/sec., the operating distances must be reduced in accordance with the following table:

Speed of travel	Reducing Coefficient
7 - 14 m/sec	0,9
15 - 25 m/sec	0,8

Case

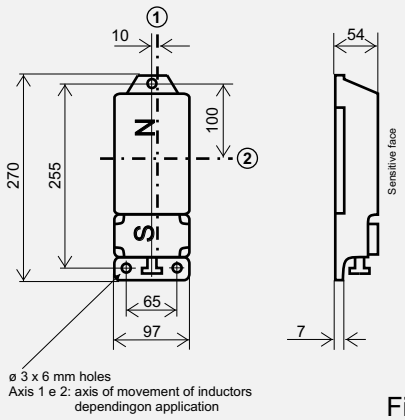

Fig.19

- Rugged light alloy casting coated with Rilsan
- Electrical connections by terminal strip
- Switches are delivered with 16 mm cable gland; adaptors 11 mm and 13 mm cable glands are also supplied
- Total weight of the unit: 2 kg
- Sealed by neoprene gaskets against dust and trickling water
- Mechanism is completely encapsulated

Electrical contacts

- 2 Changeover contacts, silver-gold 900/1000
- Rating: 2,5A at 240Vac
  0,5A at 110Vdc

Contacts may be connected in series to switch 240Vdc
Connecting the contacts in parallel enable a current of 4Adc to be interrupted
Temperature limits: -20°C +70°C

Electrical connessions

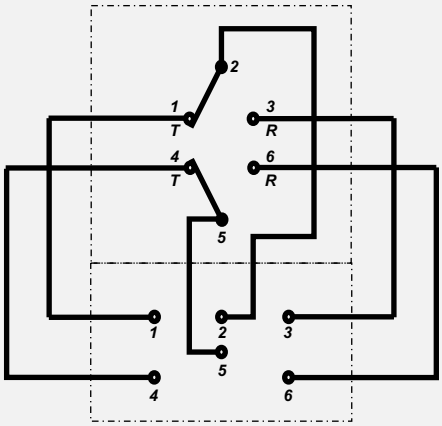

Fig.20

- Terminal clamping area: 2mm²
- In the case of Magnetic Switches of the Automatic Reset Type, the 'R' contacts are closed in the presence of an inductor.

Magnetic switch type 1892

Sealed Case. Max.Operating Distance 180 mm.
Ref. 1892 PS - two position
Ref. 1892 RA - automatic reset

Operating distances vary according to the inductor used:

Inductor	Max operating distance
1895	180 mm
1927 A 50	110 mm
1927 A 36	60 mm
1975 (coil type)	180 mm

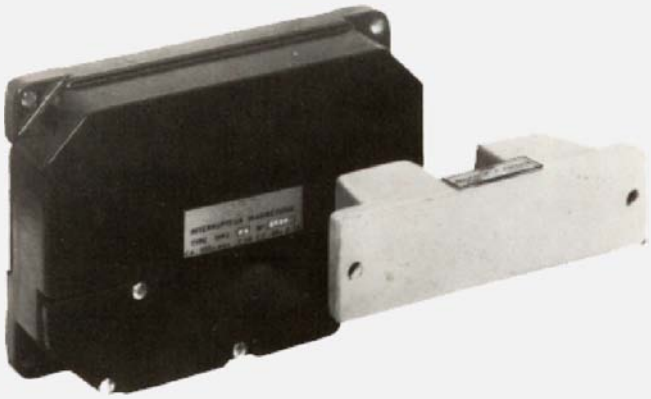

Note:
1. In practice, actual operating distances are 15% less than the figures quoted above.
2. If the speed of the inductor exceed 6 metres/sec., the operating distances must be reduced in accordance with the following table:

Speed of travel	Reducing Coefficient
7 - 14 m/sec	0,9
15 - 25 m/sec	0,8

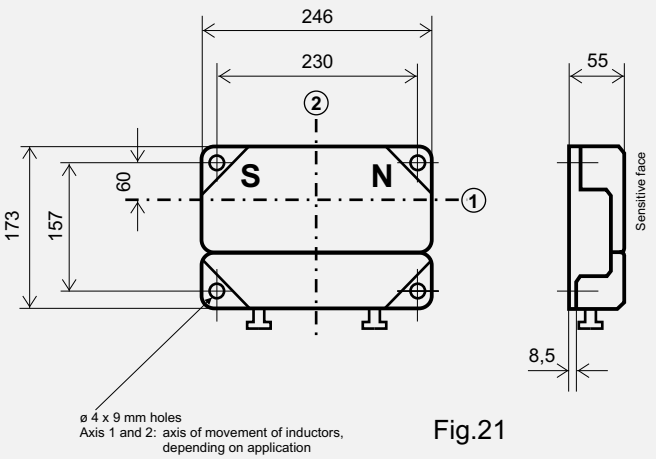

Fig.21

Magnetic switch type 1892

Sealed Stainless Steel Case. Max.Operating Distance 180 mm.
Ref. 1892 PS - two position
Ref. 1892 RA - automatic reset

Operating characteristic of the switch mechanism are the same as switch Nos.1892PS ans 1892RA.
This unit consists of a chemically-resistant sealed stainless steel case, housing the electrical switch contacts which are shifted simultaneously by the influence of an inductor. Thecase is filled with epoxy resin for complete sealing. Electrical connections are made through a cable integral with the case, which is led out through a cable gland fitted with a mechanical holding device. The switch, which is completely sealed against dust and tricking water, can be immersed in water to a depth of 0,5 metres

- Rugged light alloy casting coated with Rilsan.
- Electrical connections on tropicalized six terminal block.
- Switches are delivered with a 16 mm cable gland. A tapped hole, normally blanked by a threaded plug serves as a second gland entry. Each unit is supplied with adaptors 11 mm and 13 mm cable glands.
- Total weight: 3,4 kg.
- Sealed by neoprene gaskets against dust and trickling water.
- Mechanism is completely encapsulated.

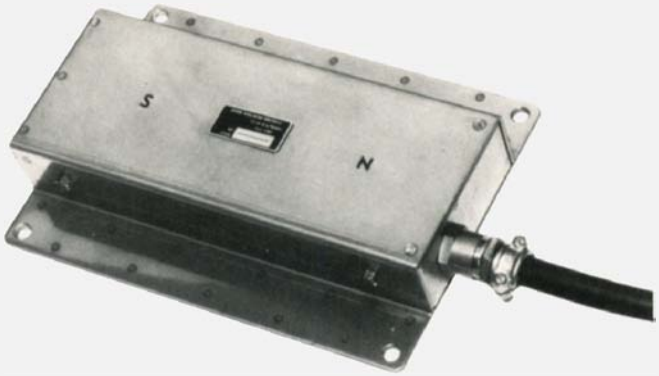

Electrical contacts

- 2 Changeover contacts, silver-gold 900/1000
- Rating: 2,5A at 240Vac
  0,5A at 110Vdc

Contacts may be connected in series to switch 240Vdc
Connecting the contacts in parallel enable a current of 4Adc to be interrupted.
Temperature limits: -20°C +70°C

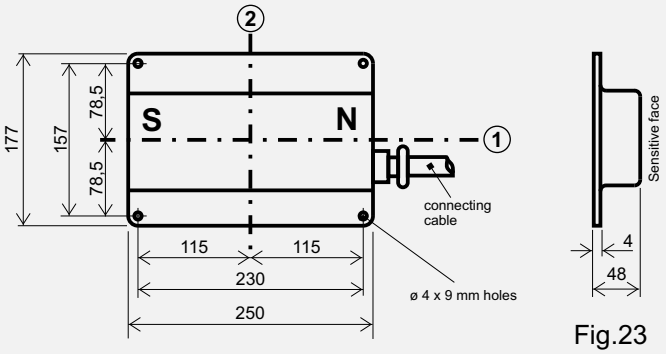

Fig.23

Electrical connessions

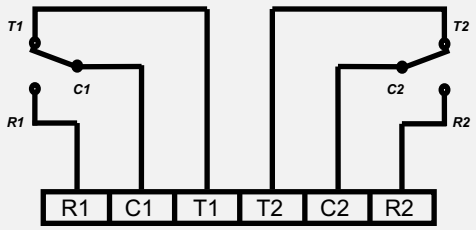

Fig.22

- Terminal clamping area: 3 mm^2.
- In the case of Magnetic Switches of the Automatic Reset Type, the 'R' contacts are closed in the presence of an inductor.
  The two contacts are shifted simultaneously.

Case:
2 mm 18/8 stainless steel. Waterproof to a depth of 0,5 metres

Contacts:
Output Cable: 7 x 1,5 mm^2, length 3 metres. Other lengths available on request.

Conductor Markings:	Make-break 1	Make-Break 2
	Wire 1 - R1	Wire 4 - T2
	Wire 2 - C1	Wire 5 - C2
	Wire 3 - T1	Wire 6 - R2

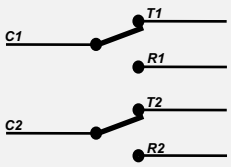

In the case of Magnetic Switches of the Automatic Reset Type, the 'R' contacts are closed in the presence of an inductor.
Total weight with 3 metres of cable: 5,2 kg.

INDUCTORS

Permanent magnet inductors

These inductors consist of powerful TICONAL permanent magnets encased in polyester resin for chemical and mechanical protection. These alloy magnets maintain their high magnetic properties over a long period of time. Polarities are identified as follows:

NORTH -'N' or Red colour
SOUTH -'S' or Blue colour

Permanent Magnet Inductors may be used with Magnetic Switches as shown in the following table:

TECHNICAL DETAILS

Material: TICONAL permanent magnets, Polyester resin covered.
Curie Point: 585°C
Working temperature: - 20°C to + 90°C
Note The upper temperature limit may be extended to 300°C by encasing the magnets in Silicone Resin
Magnetisation:
Loss: 0,02% per °C
Coding: North Polarity - 'N' or Red
South Polarity - 'S' or Blue
Packing: Inductors Nos.1922 and 1895 are fitted with a mild steel shunt to prevent de-magnetization in cases where they may be placed side by side with polarities matched. The shunt should be removed before use
Note: Never place inductors with like poles facing each other

Inductors			Switches	
Max.operating distance	profile		code	type
60 mm	 1922		1919 1919 1892 1892	Two positions Automatic reset Two positions Automatic reset
60 mm	 1927 A 36/N	 1927 A 36/S	1919 1892	Two positions Two positions
110 mm	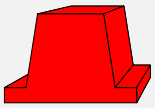 1927 A 50/N	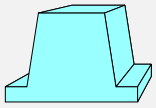 1927 A 50/S	1919 1892	Two positions Two positions
180 mm	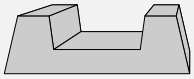 1895		1919 1919 1892 1892	Two positions Automatic reset Two positions Automatic reset

1895

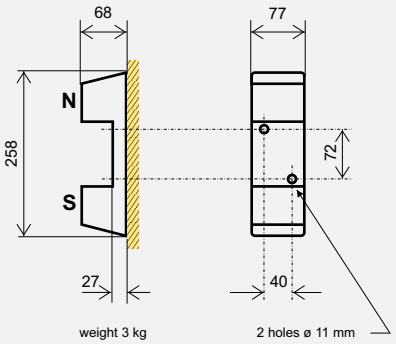

Fig.24

1922

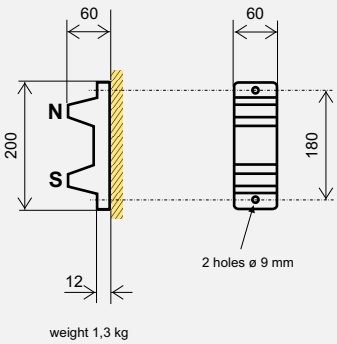

Fig.25

1927A36 - 1927A50

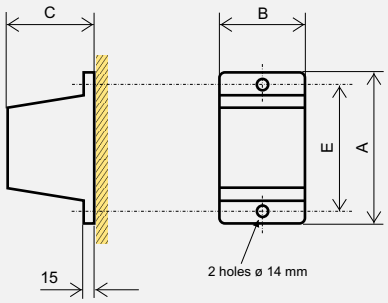

Type	A	B	C	E	Weight kg
1927 A 36	150	80	70	110	1,400
1927 A 50	190	105	105	145	3,650

Fig.26

COIL INDUCTORS

These consist of two DC operated coils mounted in a housing witch comprises a mild steel yoke and two poles shoes. A light alloy cover protects the unit grom mechanical damage and seals it from dust and water ingress.
By virtue of their characteristics, these inductors give a great degree of flexibility to a system using magnetic switches.
Tey provide the possibility of changing the polarity of theinductor or cancellingthe field and hence the action of the switch.
Similary, switches may be operated or not, as required, by either energising or not energising the inductor coil.
When used in combination with permanent magnet inductors they widen the application of these switches which may be used in complex automated installations.

Power Supplies

Normally the coil inductors are fed from a DC power source.
For installations where periodic reversal of polarities is unnecessary, they can be supplied with a built-in rectifier and can be connected directly to AC power source.
Coil Inductors are available for the following voltages:

Direct Current: 110 V - 240 V
Alternating Current: 110 V - 240 V at 50 Hz
Power Consumption: 30 W

Note In the case of a rectified DC supply, the rectifier should have an inverse voltage equal to 5 times the rectified.

Coil Inductors may be used with Magnetic Switches as shown in the following table:

Max operating distance	Inductor code	Switch code	Type
60 mm	1969	1919 1919	Two positions Automatic reset
180 mm	1975	1892 1892	Two positions Automatic reset

TECHICAL DETAILS

Materias: Mildsteel yoke and Magnetic Shoes Light alloy cover
Rilsan coating for protection
Working temperature: - 20°C to + 70°C

Code	Voltage	A	B	C	E	Weight kg
1969	110 Vcc 240 Vcc 110Vca 240 Vca	250	100	108	224	6,5
1975	110 Vcc 240 Vcc 110 Vca 240 Vca	330	100	108	304	7,2

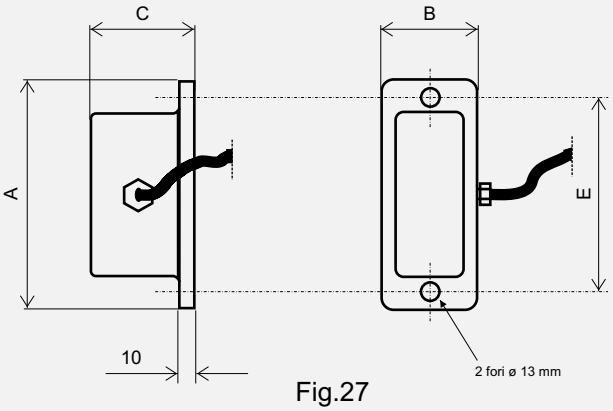

Fig.27

FITRE S.p.A.

I-20142 MILANO (Italy) • via Valsolda, 15
phone: (+39) 02.8959.01 • fax: (+39) 02.8959.0400
e-mail: fitre.milano@fitre.it

I-00142 ROMA (Italy) • via Andrea di Bonaiuto, 39/41
phone: (+39) 06.51963518 • fax: (+39) 06.5035841
e-mail: fitre.roma@fitre.it

I-30174 VENEZIA - MESTRE (Italy) • via Don F. Tosatto, 129
phone: (+39) 041.951822 • fax: (+39) 041.951987
e-mail: fitre.mestre@fitre.it

Contact Center: phone: 02.8959.0318 • fax: 02.8959.0480 • email: info@fitre.it